Dimensions (unit:mm)

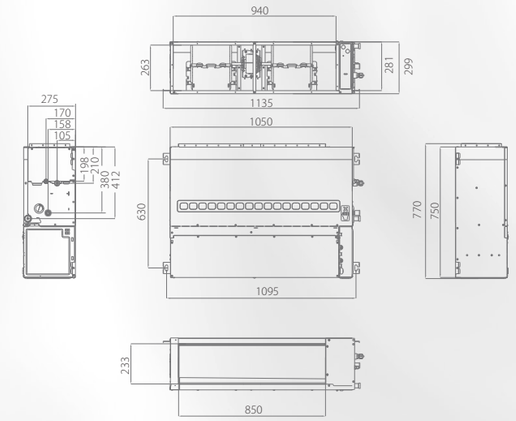

Model
5.6-9.0kW

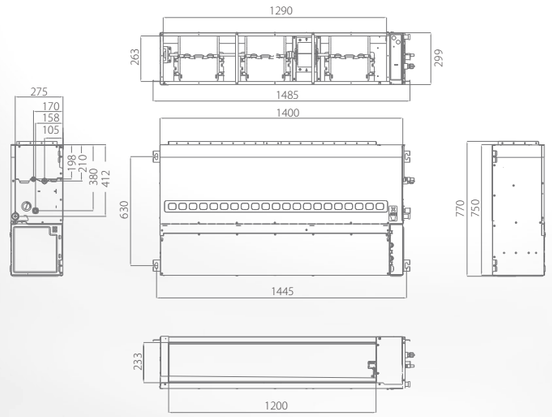

Model
11.2-16.0kW

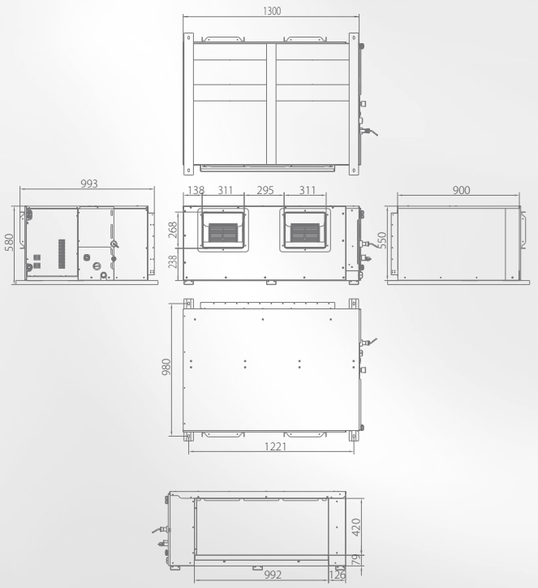

Model
20.0-33.5kW

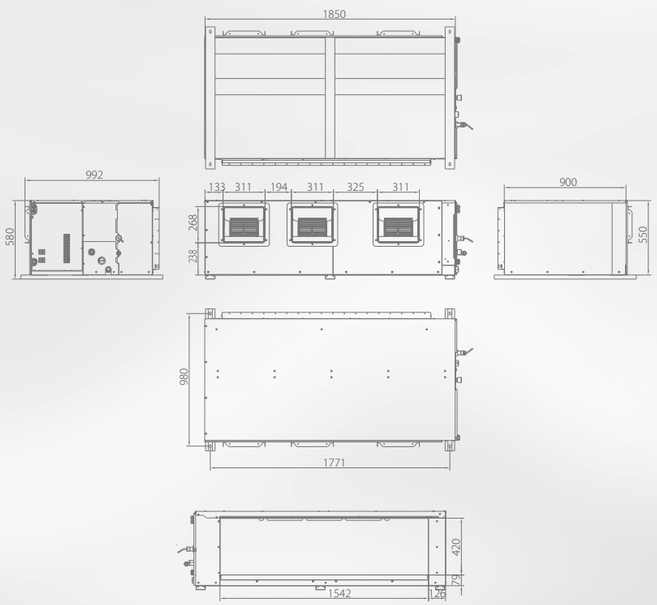

Model
40.0-56kW

Note: These products are under development and the specifications are always subject to change

Midea Building Technologies Division

Midea Group

Add.: Midea Headquarters Building, 6 Midea Avenue, Shunde, Foshan, Guangdong, China
Postal code: 528311
mbt.midea.com www.midea-group.com tsp.midea.com

Midea reserves the right to change the specifications of the product, and to withdraw or replace products without prior notification or public announcement. Midea is constantly developing and improving its products.

Quality Assurance ISO 9001
Environmental Management ISO 14001
Occupational Health and Safety Management ISO 45001

B-V8T1HEU202307

Midea

V8 VRF Indoor Units High Static Pressure Duct



DISCOVER
RELIABLE COMFORT

EU

Why Choose V8 High Static Pressure Duct



True Feelings 1: **During the installation of VRF systems, errors often occur when connecting the communication line, often resulting in project delay**

Support any topology communication*

In addition to the traditional daisy chain connection, the communication wire supports tree connection, star connection, ring connection and so on. The wring is flexible, which greatly reduces the installation cost and has no possibility of wrong connection on site.

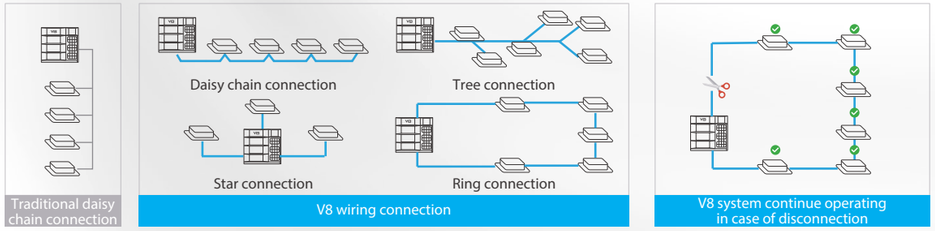

*Only when use HyperLink communication.



True Feelings 2: **In the VRF system, all indoor units need to be powered on uniformly. When one indoor unit fails and needs to be powered off for maintenance, the whole system will be powered off, and everyone can only wait for the maintenance to be completed.**

Flexible Power Supply for Indoor Units

HyperLink 's unique communication method allows the indoor units to be powered not only by a uniform power supply, but also by individual and zone power supplies, making it particularly suitable for each shop in a large complex building, which can independently power on and off its own indoor units.

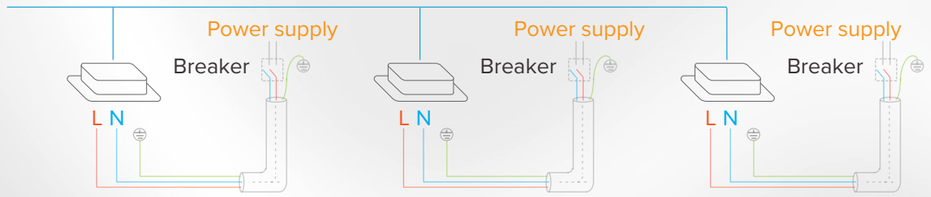

*Only when use HyperLink communication.



True Feelings 3: **After using the air duct machine for a period of time, I often encounter issues with reduced air flow and decreased cooling/heating performance.**

Constant Airflow Technology

Through the independent constant air volume digital fan technology, the air volume is independently detected and adjusted to realize constant air volume and no attenuation in the whole life.

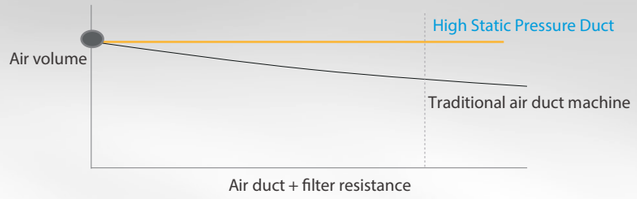

Features

Innovative Puro-air Kit

Protectors of health and safety

From Germany -OSRAM quality UV light source

Ozone –Free
UV leakage-Free

*The indoor unit needs to be customized in order to use the Puro-air Kit.



Efficiency filter screen

Optional F7 or H13-class air filter, Equipped with H13 HEPA high-efficiency filter screen, it can filter 0.5 micron extremely fine particles, and the primary filtration efficiency is more than 99.95%.



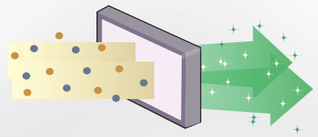

Multi-functional Expansion Board

A wide range of accessories can be connected via expansion boards for even more functionality.

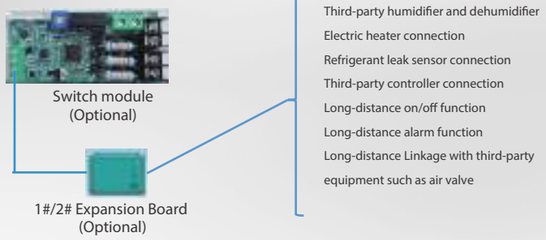

Intelligent leak feedback

Digital feedback DC water pump, Take the initiative to sense the pump speed and water flow, judge whether there is jamming attenuation or damage, and give early warning to avoid water leakage
Integrated drainage pipe design reduces the sealing points of traditional design from 6 to 2, reduces breakpoints and reduces leakage risks

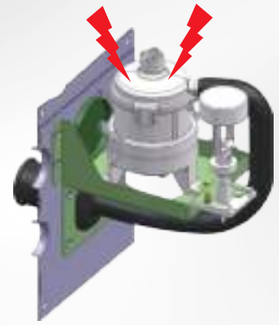

Ultra-thin fuselage

For High Static Pressure Duct (5.6-16kW), the fuselage thickness is only **299mm**,the height required for ceiling installation is greatly reduced which leads to be able to cope with more installation situations.

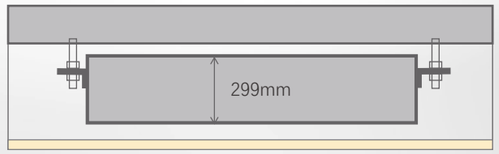

Specification

Model name			MIH56T1N18	MIH71T1N18	MIH80T1N18	MIH90T1N18
Power supply			1-phase, 220-240V, 50Hz			
Cooling[1]	Capacity	kW	5.6	7.1	8	9
		kBut/h	19.1	24.2	27.3	30.7
	Input	W	159	159	159	196
Heating[2]	Capacity	kW	6.3	8	9	10
		kBut/h	21.5	27.3	30.7	34.1
	Input	W	159	159	159	196
Airflow rate[3]		m³/h	1360/1281/1201/1122/1043/963/884	1360/1281/1201/1122/1043/963/884	1360/1281/1201/1122/1043/963/884	1500/1413/1325/1238/1150/1063/975
External static pressure[4]		Pa	80 (0-250)			
Sound pressure level[5]		dB(A)	39/38/36/35/33/32/30	39/38/36/35/33/32/30	39/38/36/35/33/32/30	40/39/37/36/34/33/31
Sound power level[5]		dB(A)	59/56/54/53/51/49/47	59/56/54/53/51/49/47	59/56/54/53/51/49/47	63/60/58/56/54/52/50
Unit	Net dimensions[6] (W×H×D)	mm	1050×299×750			
	Packed dimensions (W×H×D)	mm	1215×359×890			
	Net/Gross weight	kg	35/38.5	35/38.5	35/38.5	35/38.5
Pipe connections	Liquid/Gas pipe	mm	Φ6.35/Φ12.7	Φ9.52/Φ15.9		
	Drain pipe	mm	OD Φ25			

Model name			MIH112T1N18	MIH125T1N18	MIH140T1N18	MIH160T1N18
Power supply			1-phase, 220-240V, 50Hz			
Cooling[1]	Capacity	kW	11.2	12.5	14	16
		kBut/h	38.2	42.7	47.8	54.6
	Input	W	248	252	284	339
Heating[2]	Capacity	kW	12.5	14	16	18
		kBut/h	42.7	47.8	54.6	61.4
	Input	W	248	252	284	339
Airflow rate[3]		m³/h	2140/2015/1890/1766/1641/1516/1391	2150/2025/1899/1774/1649/1523/1398	2400/2260/2120/1980/1840/1700/1560	2600/2448/2297/2145/1993/1842/1690
External static pressure[4]		Pa	80 (0-250)	100 (0-250)		
Sound pressure level[5]		dB(A)	41/40/38/37/35/34/32	41/40/39/37/36/35/33	43/42/40/39/37/36/34	44/43/41/40/38/37/35
Sound power level[5]		dB(A)	63/61/59/57/56/54/52	66/64/62/60/58/56/54	67/64/62/60/58/57/55	68/66/64/62/60/59/57
Unit	Net dimensions[6] (W×H×D)	mm	1400×299×750			
	Packed dimensions (W×H×D)	mm	1565×359×890			
	Net/Gross weight	kg	44.5/48.5	46.5/50.5	46.5/50.5	46.5/50.5
Pipe connections	Liquid/Gas pipe	mm	Φ9.52/Φ15.9			
	Drain pipe	mm	OD Φ25			

Notes:
1. Indoor temperature 27°C DB, 19°C WB; outdoor temperature 35°C DB; equivalent refrigerant piping length 7.5m with zero level difference.
2. Indoor temperature 20°C DB; outdoor temperature 7°C DB, 6°C WB; equivalent refrigerant piping length 7.5m with zero level difference.
3. Fan motor speed and air flow rate are from the highest speed to the lowest speed, total 7 rates for each model.
4. Stable operation external static pressure range. (Note: setting external static pressure outside the unit's optimal static pressure range may lead to higher noise levels and lower airflow rate. For the optimal external static pressure range refer to the unit's installation manual.)
5. Sound pressure level is from highest level to lowest level, total 7 levels for each model. Sound pressure level is measured 1.4m below the unit in a anechoic chamber.
6. The dimension is only the body size, excluding the size of the installation lug, connecting copper pipe, etc. For detailed dimensions, please refer to the installation manual.
7. All specifications are measured at standard external static pressure

Specification

Model name			MIH200T1N18	MIH224T1N18	MIH252T1N18	MIH280T1N18
Power supply			1-phase, 220-240V, 50Hz			
Cooling[1]	Capacity	kW	20	22.4	25.2	28
		kBut/h	68.3	76.5	86.0	95.6
	Input	W	780	780	780	780
Heating[2]	Capacity	kW	22.5	25	26	31.5
		kBut/h	76.8	85.3	88.7	107.5
	Input	W	780	780	780	780
Airflow rate[3]		m³/h	4700/4387/4073/3760/3447/3133/2820	4700/4387/4073/3760/3447/3133/2820	4700/4387/4073/3760/3447/3133/2820	4700/4387/4073/3760/3447/3133/2820
External static pressure[4]		Pa	200(0-400)			
Sound pressure level[5]		dB(A)	51/50/48/46/44/43/42	51/50/48/46/44/43/42	51/50/48/46/44/43/42	51/50/48/46/44/43/42
Sound power level[5]		dB(A)	74/72/70/68/66/64/62	74/72/70/68/66/64/62	74/72/70/68/66/64/62	74/72/70/68/66/64/62
Unit	Net dimensions[6] (W×H×D)	mm	1300×580×900			
	Packed dimensions (W×H×D)	mm	1530×730×1060			
	Net/Gross weight	kg	125/150			
Pipe connections	Liquid/Gas pipe	mm	Φ9.52/Φ19.1		Φ12.7/Φ22.2	
	Drain pipe	mm	OD Φ32			

Model name			MIH335T1N18	MIH400T1N18	MIH450T1N18	MIH560T1N18
Power supply			1-phase, 220-240V, 50Hz			
Cooling[1]	Capacity	kW	33.5	40	45	56
		kBut/h	114.3	136.5	153.6	191.1
	Input	W	810	1850	1850	2030
Heating[2]	Capacity	kW	38	45	56	63
		kBut/h	129.7	153.6	191.1	215.0
	Input	W	810	1850	1850	2030
Airflow rate[3]		m³/h	4700/4387/4073/3760/3447/3133/2820	7500/7000/6500/6000/5500/5000/4500	7500/7000/6500/6000/5500/5000/4500	8400/7840/7280/6720/6160/5600/5040
External static pressure[4]		Pa	200(0-400)	300(0-400)		
Sound pressure level[5]		dB(A)	52/51/49/48/46/44/43	58/56/54/52/50/49/48	58/56/54/52/50/49/48	59/58/56/54/53/51/49
Sound power level[5]		dB(A)	74/72/70/68/66/63/61	79/78/76/74/72/70/67	79/78/76/74/72/70/67	81/80/77/75/73/71/69
Unit	Net dimensions[6] (W×H×D)	mm	1300×580×900	1850×580×900		
	Packed dimensions (W×H×D)	mm	1530×725×1060	2080×730×1060		
	Net/Gross weight	kg	128/153	166/204	166/204	170/208
Pipe connections	Liquid/Gas pipe	mm	Φ12.7/Φ25.4		Φ15.9/Φ28.6	
	Drain pipe	mm	OD Φ32			

Notes:
1. Indoor temperature 27°C DB, 19°C WB; outdoor temperature 35°C DB; equivalent refrigerant piping length 7.5m with zero level difference.
2. Indoor temperature 20°C DB; outdoor temperature 7°C DB, 6°C WB; equivalent refrigerant piping length 7.5m with zero level difference.
3. Fan motor speed and air flow rate are from the highest speed to the lowest speed, total 7 rates for each model.
4. Stable operation external static pressure range. (Note: setting external static pressure outside the unit's optimal static pressure range may lead to higher noise levels and lower airflow rate. For the optimal external static pressure range refer to the unit's installation manual.)
5. Sound pressure level is from highest level to lowest level, total 7 levels for each model. Sound pressure level is measured 1.4m below the unit in a anechoic chamber.
6. The dimension is only the body size, excluding the size of the installation lug, connecting copper pipe, etc. For detailed dimensions, please refer to the installation manual.
7. All specifications are measured at standard external static pressure